ISSUED FOR APPROVAL

By: _____

Date: _____

☐ Approved As Submitted
☐ Approved As Noted
☐ Rejected

## MACHINE SPECIFICATIONS

SERIAL NO : 3562
DESIGNATION : SPLX-MKII-2- RH(F) 4840 REPD
ELECTRICAL SPECIFICATION
480V-60-3PH
AMP SERVICE REQUIRED: 60
FULL LOAD AMPS: 40
KVA: 26.6
TOTAL HORSEPOWER: 12
AIR REQUIREMENTS
SYSTEM AIR PRESSURE: 80 PSI
SCFM (FREE AIR):18.9
SHIPPING DIMENSIONS (BELT CONVEYOR REMOVES FOR SHIPPING)

LENGTH: 18'-11"
WIDTH: 8'-0"
HEIGHT: 9'-8 3/8"

EMERGENCY STOP BUTTON LOCATIONS------✳
ITEMS THAT CAN BE REMOVED FOR SHIPPING-------

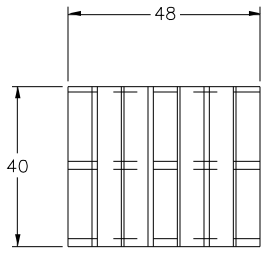


LOAD EMPTY PALLETS

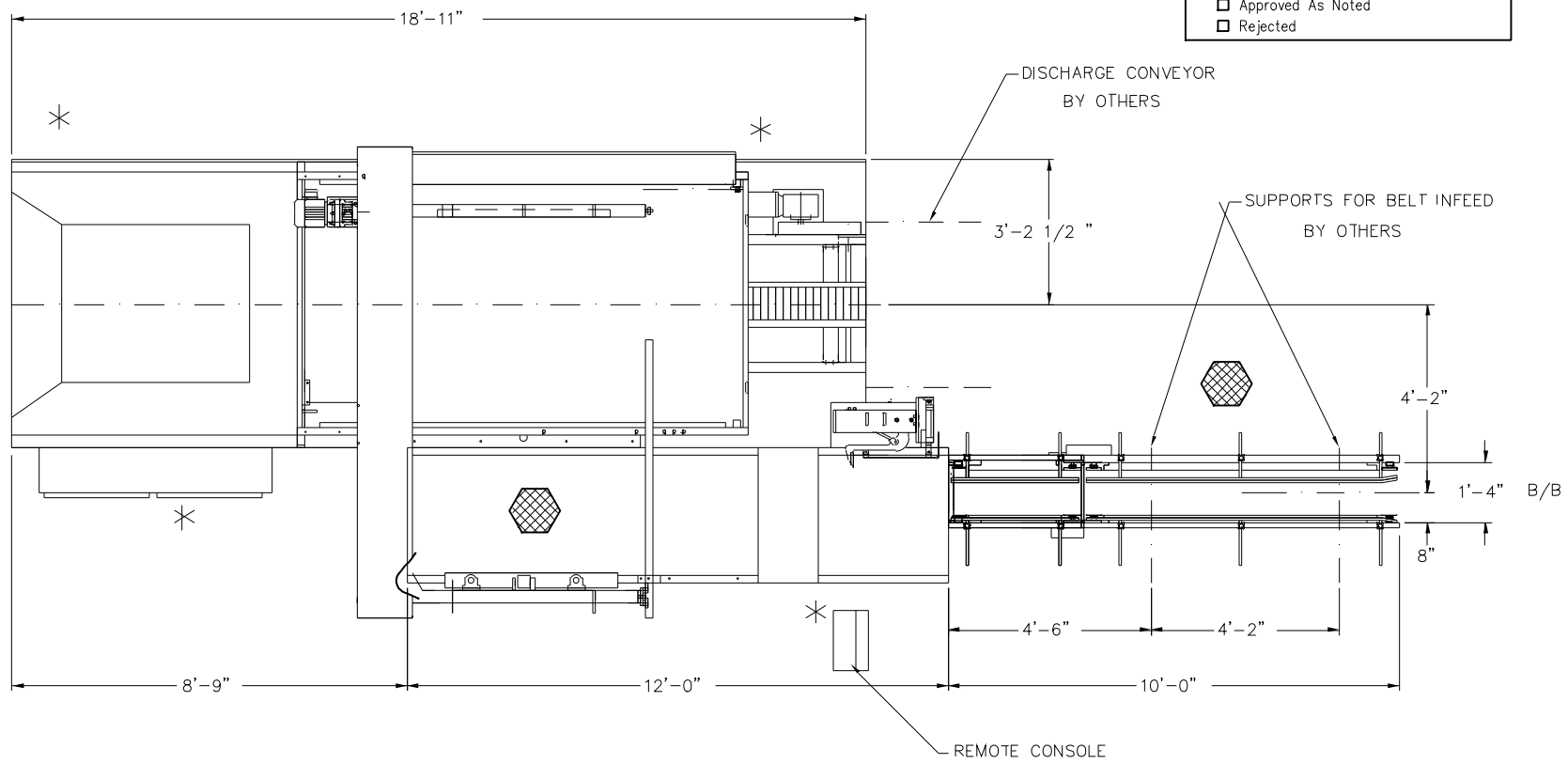


13E

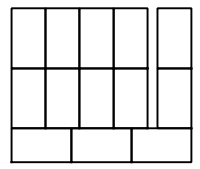

15.06X8.87X13.18

18C

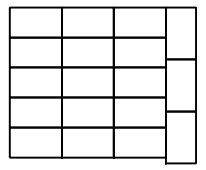

13X7.5X13.18

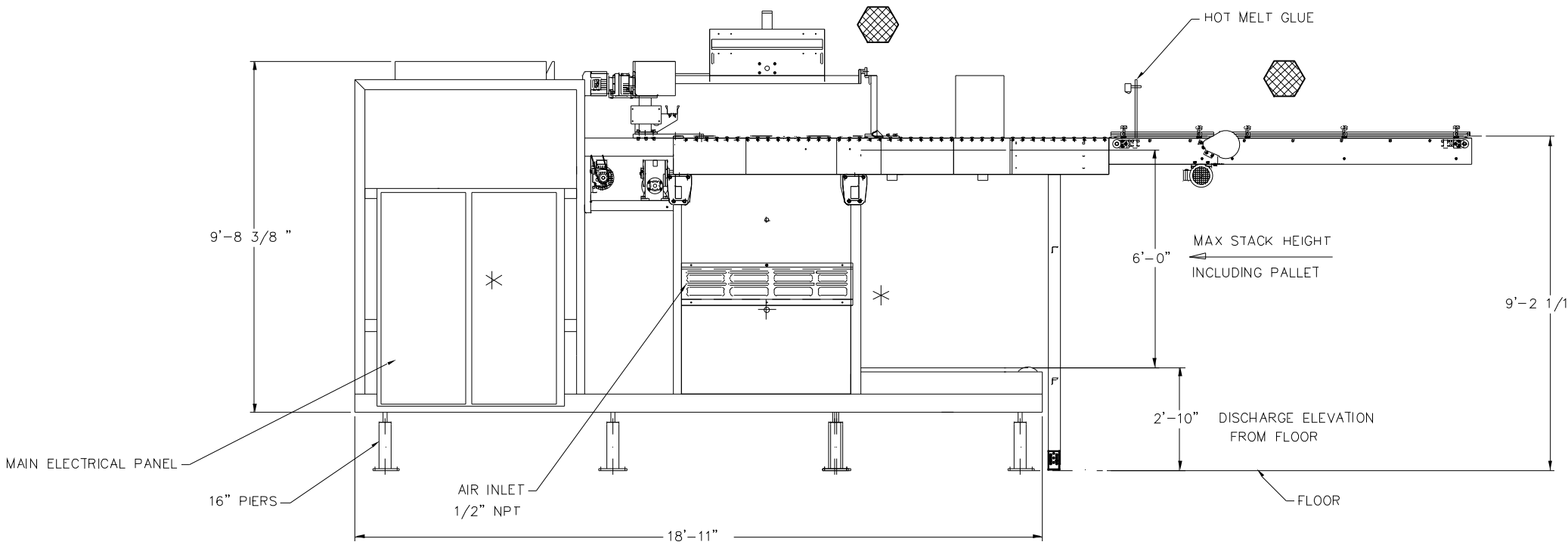


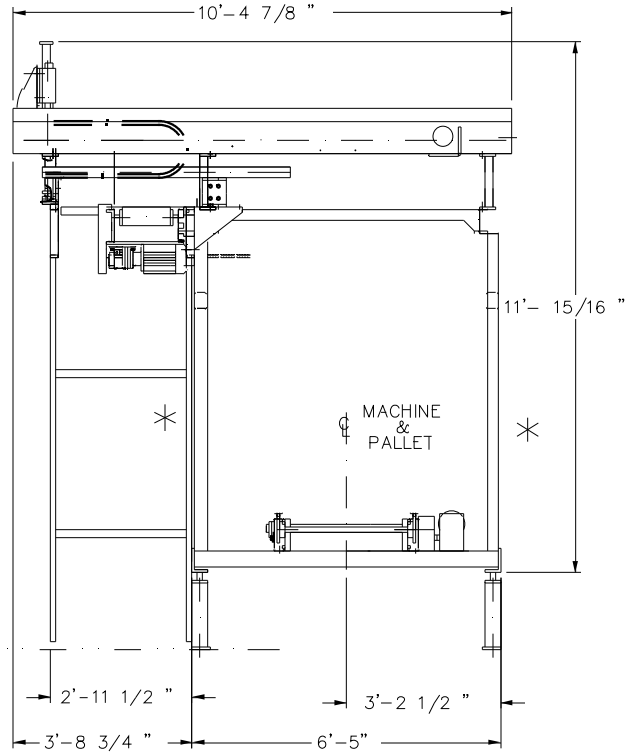


| ECO NUMBER | REV | REVISION | DATE | CHANGED BY | APPROVED BY |
|---|---|---|---|---|---|
| ---- | A | DRAWING RELEASE | | | |

TOLERANCES
FRACTIONS ±1/32"
.XX ±.015
.XXX ±.005
.XXXX ±.0010
ANGLES (TOTAL RUNOUT)
MACHINING 1/2°
FABRICATING 1°
(UNLESS OTHERWISE NOTED)
U.S. CUSTOMARY UNITS

DASH NUMBER | NEXT ASS'Y NUMBER

PAINT NOTE:
BOM NUMBER:
MATERIAL:
REF DWG:

CAD/CAM DRAWING – DO NOT MANUALLY CHANGE
THIRD ANGLE PROJECTION

vonGAL

NOTICE: "THIS DRAWING AND THE DATA SHOWN THEREON ARE PROPRIETARY AND CONFIDENTIAL AND ARE NOT TO BE USED NOR REPRODUCED FOR ANY PURPOSE WITHOUT THE EXPRESSED WRITTEN CONSENT OF vonGAL CORPORATION."

DWN BY JGD DATE 02/19/09
CHKD BY DATE
SCALE 1/2"=1'-0"
APPD BY DATE

DRAWING TITLE: DIMENSIONAL LAYOUT S/N-3562
PRODUCT OR MODEL:
WEIGHT:

PROJECT NAME: BP LUBRICANTS RICHMOND, CA
PROJECT NO: 3562
CODE: M
von GAL DRAWING NO: 55149V__
SHT 1 OF 2
REV A
D-SIZE
MICROSTATION

$USER$ $DATE$ $TIME$ $FILE$ $PROJECT NAME$ $$$$SYSTIME$$$$ $$$$$