ITEM	PART NO. LH	PART NO. RH	SHT	QTY	PART DESCRIPTION AND/OR MATERIAL

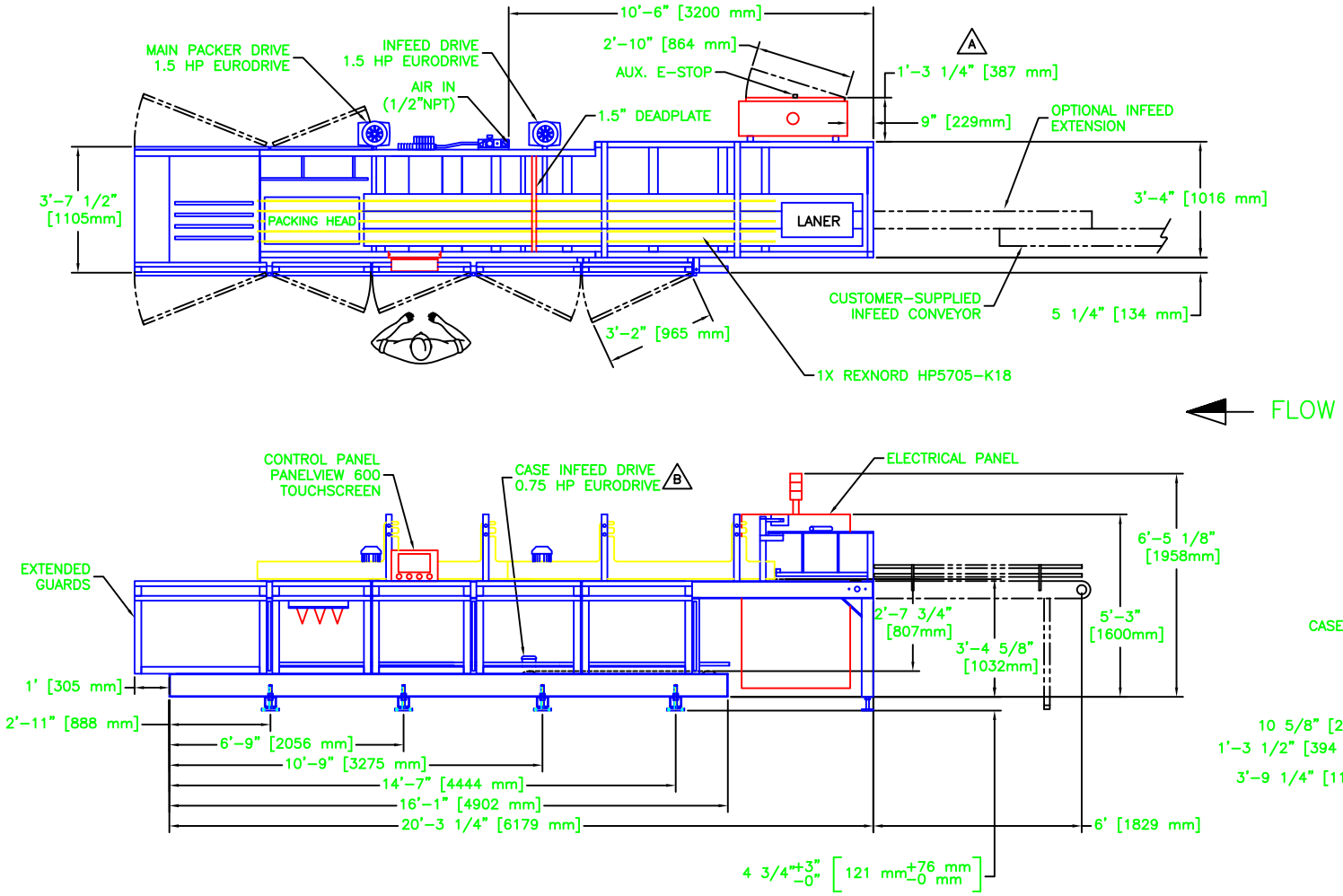

ELECTRICAL
230/460 VOLTS (OTHERS AVAILABLE)
3 PHASE
50/60 HZ
30/15 AMP SERVICE MINIMUM

AIR SUPPLY
80 PSI MINIMUM (5.5 BAR)
1" DIA [25mm]

WEIGHT
APPROXIMATELY 4500 Lbs [2040 Kg]

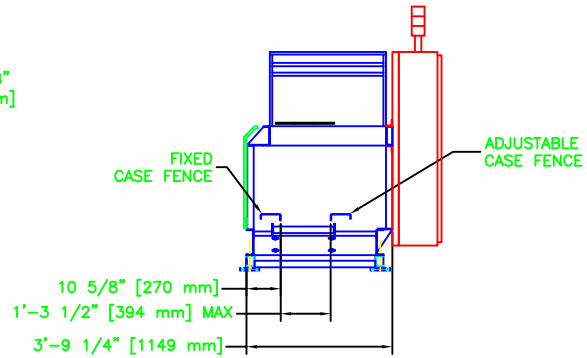

HARTNESS INTERNATIONAL CP835 PACKER
LEFT HAND MACHINE SHOWN (RIGHT HAND OPPOSITE)

THIS DRAWING IS FOR PRELIMINARY PURPOSES ONLY. ARRANGEMENT, DIMENSIONS AND COMPONENTS SUBJECT TO CHANGE WITH FINAL DESIGN.

REV	REVISION DESCRIPTION	ECO NO.	DATE	BY	CHK
F					
E					
D					
C					
B	CASE INFEED DRIVE WAS RELIANCE		9/12/03	SRS	SRS
A	CORRECTED ELECTRICAL PANEL DEPTH		01/20/03	S.A.	SRS

UNSPECIFIED TOLERANCES

INCHES		[MM]
.0	± .015	[0.38 mm]
.00	± .010	[.254 mm]
.000	± .005	[.127 mm]

FRACTIONAL ± 1/64
ANGULAR ± 1/2°
✓ 125 (UNLESS OTHERWISE NOTED)
DEBUR AND REMOVE ALL SHARP EDGES

THIS DOCUMENT IS THE PROPERTY OF, AND CONTAINS PROPRIETARY INFORMATION OWNED BY HARTNESS INTERNATIONAL, INC. AND/OR ITS SUBCONTRACTORS AND SUPPLIERS, IS TRANSMITTED TO YOU IN CONFIDENCE AND TRUST, AND IS TO BE RETURNED UPON REQUEST. NO PERMISSION IS GRANTED TO PUBLISH, USE, REPRODUCE, TRANSMIT OR DISCLOSE TO ANOTHER ANY INFORMATION CONTAINED IN THIS DOCUMENT, IN WHOLE OR IN PART, WITHOUT THE PRIOR WRITTEN PERMISSION OF AN AUTHORIZED EMPLOYEE OF HARTNESS INTERNATIONAL.

HARTNESS INTERNATIONAL, INC.
P.O. BOX 26609 1300 CARLINGTON ROAD
GREENVILLE SOUTH CAROLINA 29616 USA
PHONE: (864) 297-1300

NETWORK NODE: VOL
SCALE: NONE
DATE: 8/7/02
W/O #:
ECO NO#:
DWN. BY: SRS
CHK. BY:

CAD FILENAME: G:\83\Proposal\P-1836LH.dwg
CAD PLOT SIZE: D
DRAWING STATUS: CURRENT
REPLACED BY:
TITLE: CP835, SPLIT INFD, LANER, 20'3", LH
SURFACE ROUGHNESS ✓
SURFACE TREATMENT

REVISION: A
LOCATION: CA
SHEET NO#:

MATERIAL | ORIENTATION | DRAWING NO.
MATERIAL | ORIENTATION | DRAWING NO.
MATERIAL | ORIENTATION | DRAWING NO.
MATERIAL | ORIENTATION | DRAWING NO. P-1836LH