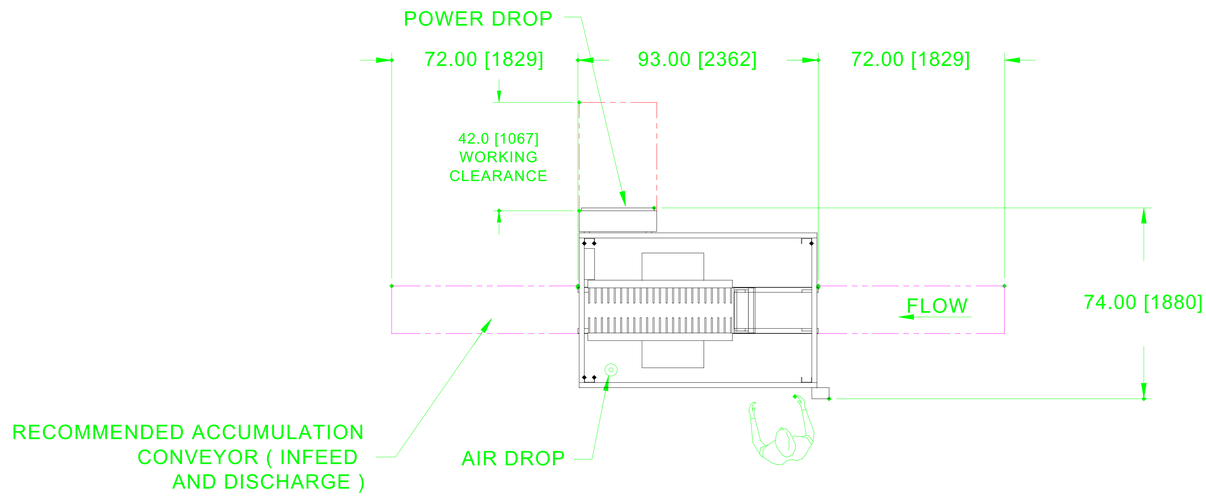

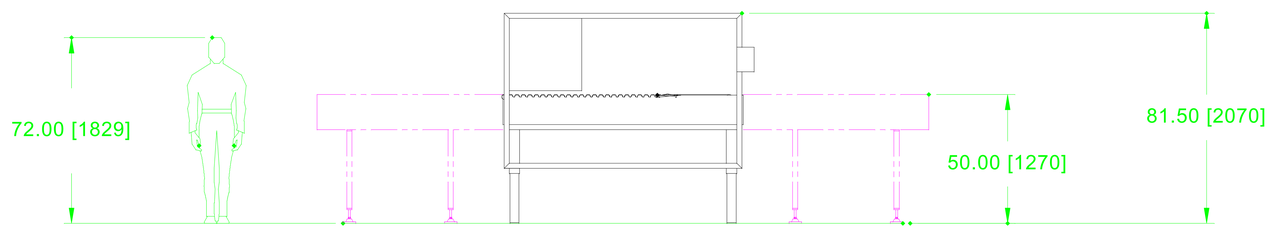

DIMENSIONS ARE IN: INCHES [MILLIMETERS]

INTERFACE SIGNALS:
1. CUSTOMER SUPPLIED DRY CONTACT FOR DISCH. CONVEYOR RUNNING
2. KHS SUPPLIED DOWNSTREAM BACKUP SENSOR TO BE MOUNTED ON CUSTOMERS CONVEYOR (APPROX 4FT DOWNSTREAM)
3. KHS SUPPLIED DRY CONTACT FOR INFEED CONVEYOR OK TO RUN

UTILITY REQUIREMENTS

PRIMARY VOLTAGE	RECOMMENDED ELEC. DROP	1/2" NPT AIR CFM @ 80PSI
575VAC	-	-
*460VAC	15A	10.0
380VAC	-	-
*230VAC	-	-
208VAC	-	-

* - INDICATES STANDARD OPERATING VOLTAGES.

KHS

KHS, Inc.
5501 N. Washington Blvd.
Sarasota, Fl. 34243

DESCRIPTION

TS-1000-155-07 LH

ADRIONDACK BEVERAGE, SCOTIA, NY

SCALE	DATE	DWN BY
1:48	12/12/06	HDO

NOTICE

THIS DRAWING AND THE SUBJECT MATTER THEREOF IS THE EXCLUSIVE PROPERTY OF KHS INC. AND IS TO BE TREATED BY YOU AS CONFIDENTIAL PROPRIETARY INFORMATION. THIS DRAWING, OR THE SUBJECT MATTER THEREOF, SHALL NOT BE DUPLICATED OR DISCLOSED TO OTHERS, WITHOUT THE EXPRESS WRITTEN CONSENT OF KHS INC. AND WILL BE RETURNED TO KHS INC. UPON REQUEST.

DRAWING NO.	REV.
TS155FP	-