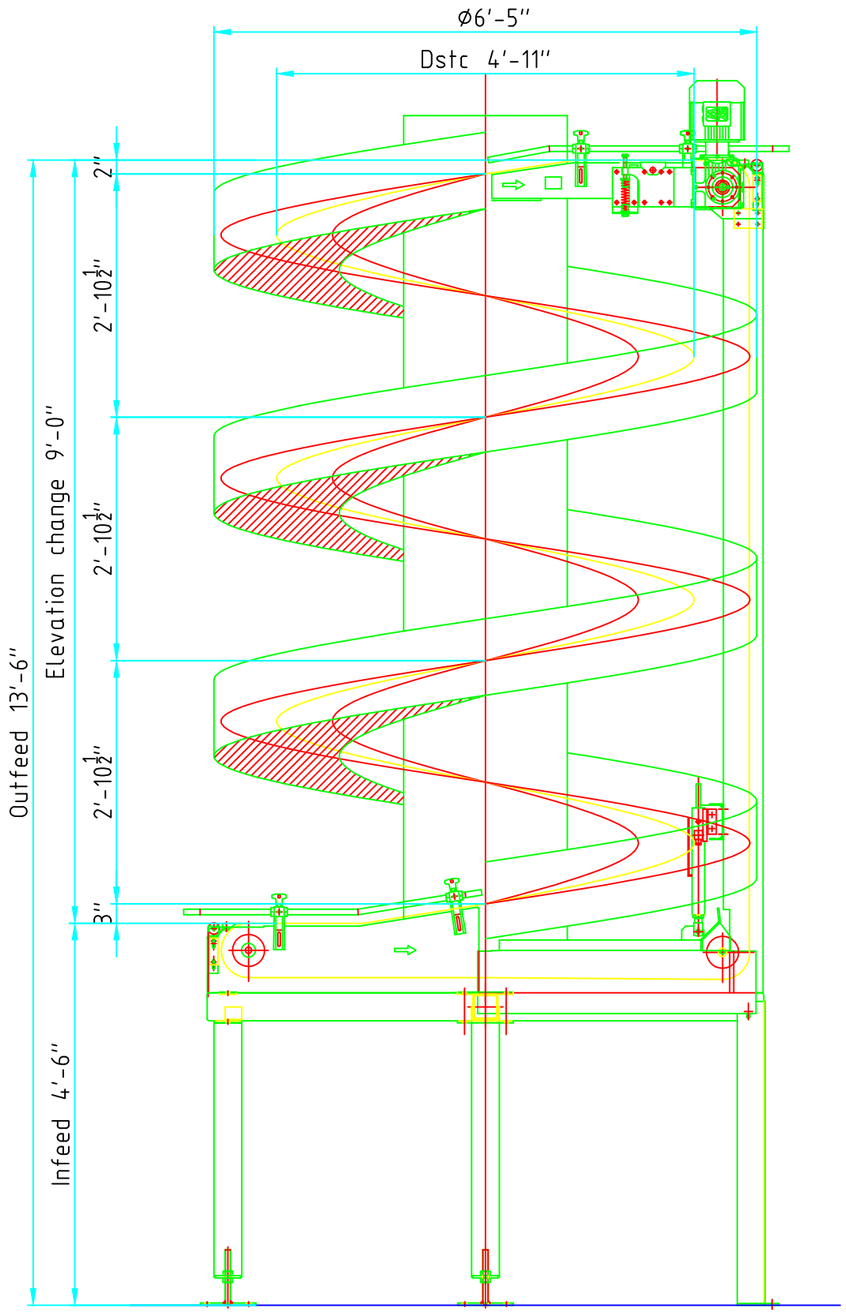

Elevate Counter Clockwise

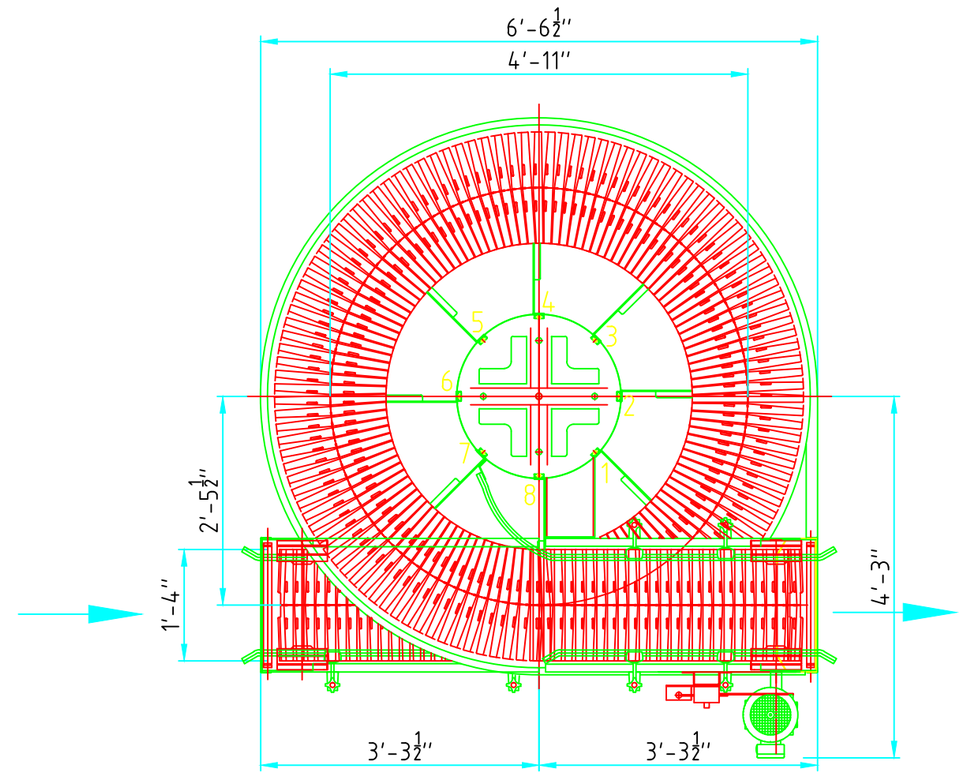

Close couple at
infeed and outfeed.

Brake Coil Voltage: 480 VAC

(Spiral will have a brake motor)

# Turns: 3	Finish: Painted Steel-It Match
TYPE: 1500-400-A3	Speed: 120 fpm
Direction: Up CCW	Infeed: 4'-6"
Drive Motor: 5 Hp	Outfeed: 13'-6"
Motor Current: 13.6/6.8 A	Elev. Change: 9'-0"
Motor Power: 3/60/230/460	Prox switches: 110 VAC

RYSON INTERNATIONAL, INC

Spiral Conveyor
Model 1500-400-A3

DESIGNER	DWG NO. 072494	REV A
DATE 05/15/07	SCALE 1:20	SHEET 1 of 1