1 Introduction

This manual is intended for personnel who will install, maintain, repair, clean, dust, clear and otherwise operate the spiral conveyor. All such personnel must receive instructions on how to safely perform their tasks and this manual must be readily available to such personnel.

Please read this manual carefully. Failure to follow the instruction contained herein may cause serious personnel injuries and premature equipment wear and possibly void the warranty.

For customer service call:

Ryson International, Inc.
300 Newsome Drive
Yorktown, VA 23692

Phone: (757) 898-1530
Fax: (757) 898-1580
E-mail: sales@ryson.com

Visit our web site at www.ryson.com

2 General Information

Ryson Reference: 04612

Purchaser:	Peach State Integrated Technologies 3005 Business Park Dr. Norcross, GA 30071
Reference:	P.O. No. 095S-006
End User:	Bacou-Dalloz USA Inc. 3125 Lewis Center Way Grove City, OH 43123
Model(s):	Two (2) Spiral Conveyors 1800-650-C1-2 1/5
Drawings:	04612-1 and 04612-2

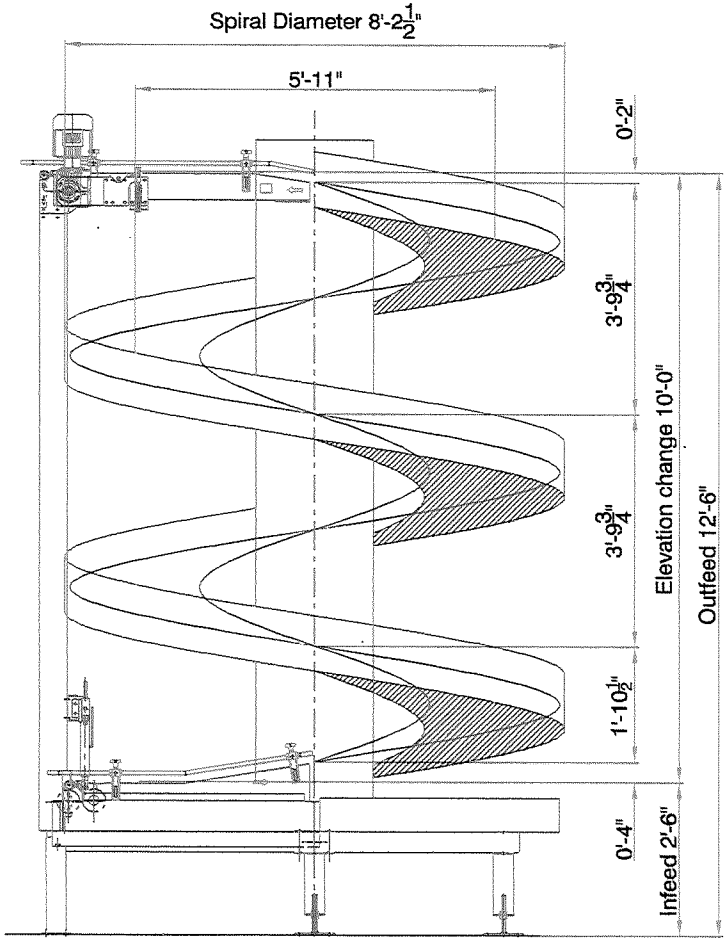

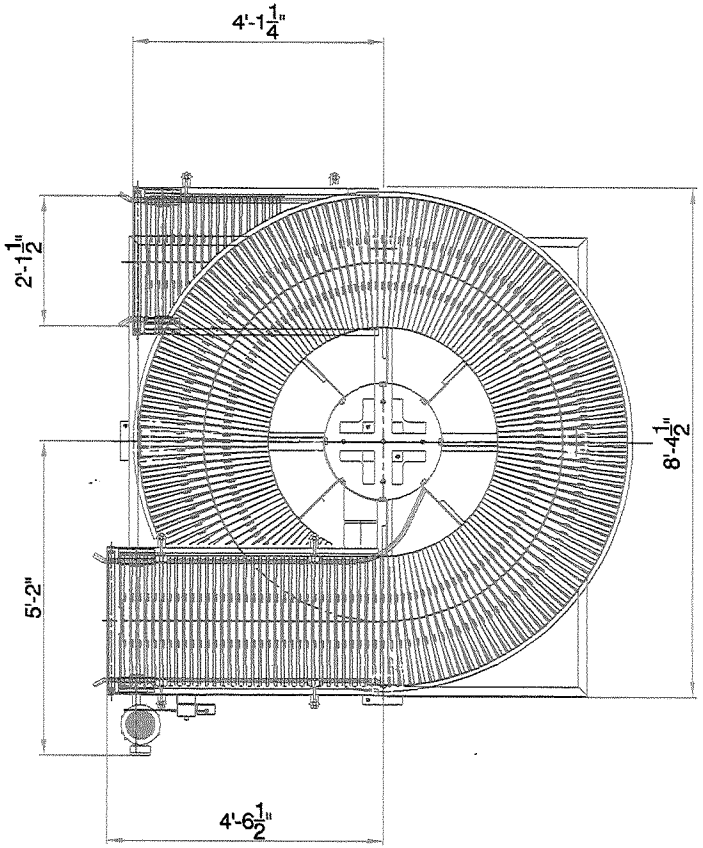

# Turns: 2.5	Finish: Painted Blue
TYPE: 1800-650-C1	Speed: 75 fpm
Direction: Up CW	Infeed: 2'-6"
Drive Motor: 2 Hp	Outfeed: 12'-6"
Motor Current: 3.1 A	Elev. Change: 10'-0"
Motor Power: 460/3/60	Prox switches: 110 VAC

RYSON INTERNATIONAL, INC.

Peach State / Bacou-Dalloz Spiral Conveyor Layout

DWG NO. 04612-1

DATE 12/5/03 SCALE NTS SHEET 1 of 1

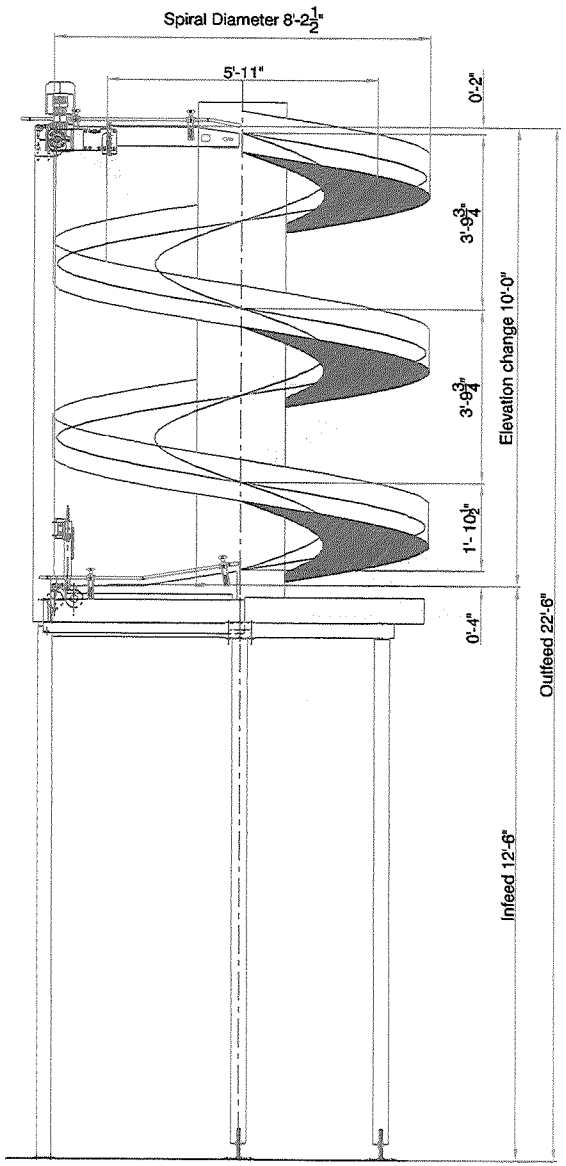

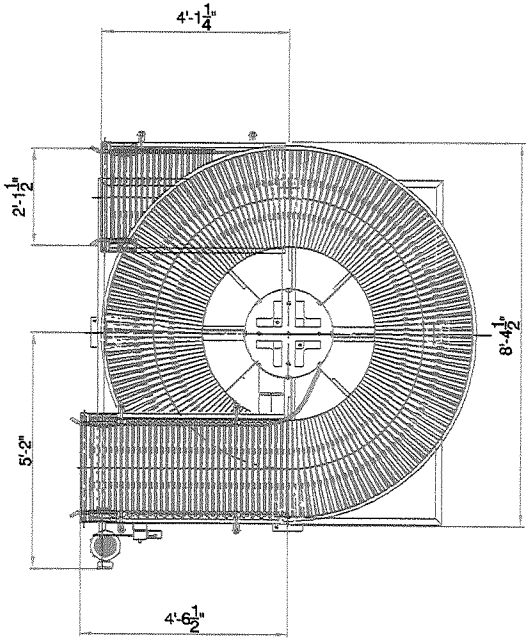

# Turns: 2.5	Finish: Painted Blue
TYPE: 1800-650-C1	Speed: 75 fpm
Direction: Up CW	Infeed: 12'-6"
Drive Motor: 2 Hp	Outfeed: 22'-6"
Motor Current: 3.1 A	Elev. Change: 10'-0"
Motor Power: 460/3/60	Prox switches: 110 VAC

RYSON INTERNATIONAL, INC.

Peach State / Bacou-Dalloz Spiral Conveyor Layout

DESIGNER | DWG NO. 04612-2 | REV

DATE 12/5/03 | SCALE NTS | SHEET 1 of 1